MODEL 5010 DUAL CHANNEL SMOKE/FIRE DETECTION MODULE

DESCRIPTION

The SST Model 5010 Two Channel Smoke/Fire Detection Module provides two independent detection input channels for the NOVA-5000 Detection and Control System. Each input circuit is designed for a two-wire “Class B” circuit, and can supply the operating voltage required to power Ionization and Photoelectric Smoke Detectors, while at the same time receiving alarm signals from these devices. Each alarm input module may also receive signals from any device that initiates a contact closure upon alarm, such as fixed temperature or rate-of-rise Heat Detectors and Manual Alarm Stations. The operation of each of the two channels on the Model 5010 Smoke/Fire Detection Input Module is independent and identical. The field wiring connected to the inputs is continuously supervised for open circuit, short circuit or ground fault conditions, and will signal a fault when one of these is detected. The module requires one mounting space in a NOVA-5000 mounting rack.

LOGIC DIAGRAM

Figure 5010-1 shows, in simplified form, the internal logic in the Smoke/Fire module, and indicates the terminal number assigned with each.

! This logic diagram, and all the other logic diagrams in this manual, may be photocopied and used as “paste ups” for help in designing your NOVA-5000 system. Disk copies of these diagrams, suitable for use in computer aided drafting programs, are also available from Safety Systems Technology at a nominal charge.

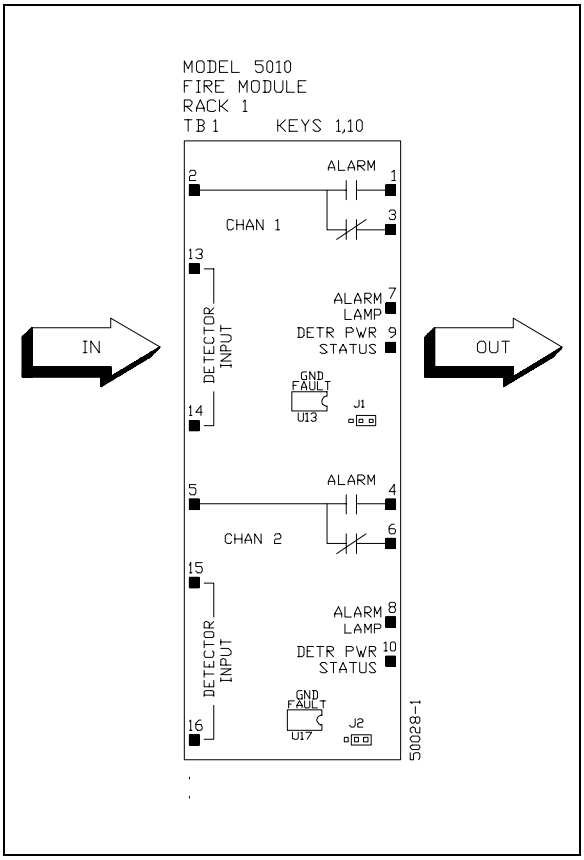

Figure 5010-1 Logic Diagram

INPUT/OUTPUT CONNECTIONS

Figure 5010-2 shows the physical arrangement of the 16 terminals associated with the Smoke/Fire Detection Module. Each of the available signals is described below.

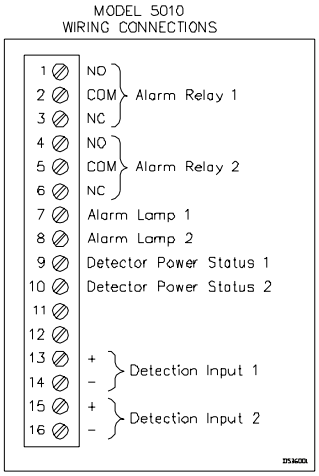

Figure 5010-2

Alarm Relay Outputs — terminals 1 through 6

These are NOVA-5000 Standard Relay Outputs that operate when an alarm is detected in the appropriate zone (1 or 2). The normally open (NO) and normally closed (NC) contacts will be in that state with no alarm detected. The relay will transfer when an alarm condition occurs, and will latch until the zone is reset by pushing the reset pushbutton on the module or the main system reset pushbutton. These outputs will not be activated if the isolate switch on the Model 5010 Module is in the Isolated position.

Alarm Lamp Outputs — terminals 7 and 8

These are Standard Alarm Lamp Outputs activated by the Alarm state of the appropriate zone. They exactly follow the state of the front panel alarm lamps, i.e. flash on initial detection of an alarm, steady when acknowledged, and switched off by reset. These outputs are activated by Lamp Test, and are not inhibited by Isolate.

Detector Power Status Outputs — terminals 9 and 10

These are Standard Logic Outputs activated by the detector power control circuits in the Model 5010 Module. Because the detection input wires to the module also supply operating power to the connected smoke detectors, a short circuit on those wires would cause excessive current draw from the system. Therefore, in case of a short circuit condition on the detection input lines, the detector power supply feed from the module is shut down. The Detector Power Status Output is energized whenever power is being supplied to the detectors, and will be deenergized when power is shut down.

If any self powered detecting devices with latching alarms are connected to the module (for instance a Safety Systems Model F100 IR Flame Detector), it will be necessary to reset the alarms in these devices after activation. Since the module power status output is momentarily interrupted whenever the module is reset, it can be used as a means to reset the electronics in the remote detectors. To do this, you would typically use the power status output to control a relay, with the relay contact arranged to either interrupt the power to the controller, or to activate the reset input on the controller.

Detection Inputs — terminals 13 through 16

These are special dual purpose inputs which connect to the field detection devices in each zone, and have the ability to detect when these devices are in alarm, while at the same time providing DC operating power for the electronics in the devices. During normal operation, there is a DC voltage of approximately plus 11 volts between one terminal and ground, and minus 11 volts between the other terminal and ground. This results in a potential of 22 volts between the two field conductors, which is used as operating power for any two-wire smoke detectors installed in the zone. This module continuously

measures the DC current being drawn from this 22 volt source, and uses this current to determine the operating status of the field devices as follows:

0 to 3 mA	Open circuit fault
3 to 13 mA	Normal (non-alarm) operating conditions
13 to 40 mA	Alarm
More than 40 mA	Short circuit fault

Although this is a supervised input, it is not the *Standard Supervised Input* described in section 5000. However, the field wiring as shown in Figure 5000-1 is applicable for any contact-type field devices connected to the Model 5010 Smoke/Fire Module. During normal operation, the only load seen by the 22 volt source will be the 3.3 Kohm end-of-line resistor. This results in a current draw of approximately 6.6 mA, which will be interpreted as normal operation. (There is also a few additional microamps of current drawn as operating power for any connected smoke detectors, but this is insignificant.) When the contact device is actuated, the 1000 ohm in-line resistor will produce an alarm current of about 29 mA. Smoke detectors may be used on the same circuit, but they are connected directly to the two wire loop, without the 1000 ohm in-line resistor. Should the smoke detector go into alarm, its internal circuitry is arranged to draw approximately 30 mA of current from the module. This will generate an alarm condition in the module.

The end-of-line resistor provides open circuit supervision of the detection circuit. Should any field wire become disconnected, current will not flow through this resistor, resulting in a module fault due to an open circuit. Likewise, a short circuit across the field wires will cause more than 40 mA to be drawn, resulting in a fault condition.

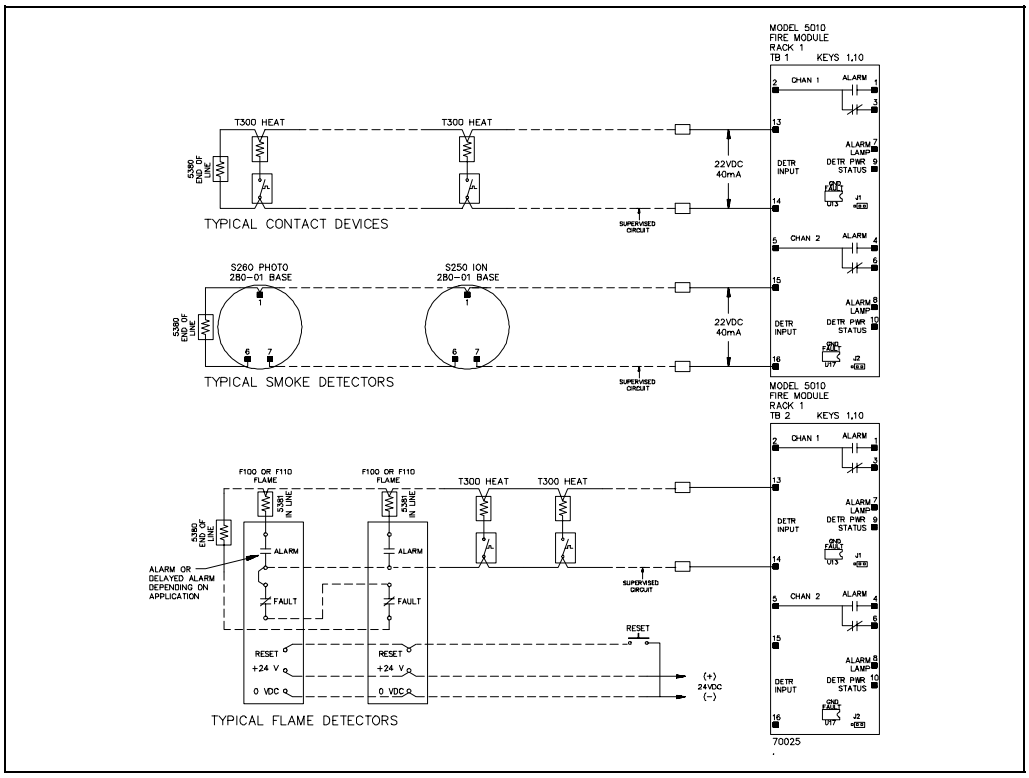

Figure 5010-3 Typical Input Wiring to Model 5010 Module

! Because of this short circuit supervision, it is imperative that any contact type field devices be installed with an in-line resistor to properly report an alarm.

The detection inputs are also continuously monitored for any ground faults. Any connection between either of the field wires and ground which results in a current difference of more than 0.2 mA being drawn from the positive and negative supplies will cause the module to report a fault, and the power supply to this input will be shut down.

Typical Wiring Diagram

The typical wiring diagram in the Reference Information section of this manual shows the *approved connections* for the Model 5010 Module. All installations should be made in conformance with this drawing. Note that when wired this way, there is no field wire that can break without interrupting the supervisory current through the end-of-line resistor. Additional input connection methods are also shown in Figure 5010-3.

! When using smoke detectors, be sure that only approved detectors as listed on the wiring diagram are use. Also be sure that the limitations when using relay equipped detectors are not violated.

Figure 5010-4 shows an *incorrect wiring method*. When connected as shown here, there are some branches of the supervised input circuit where a wire break can occur without interrupting the current through the end-of line resistor. This wiring method is unsafe.

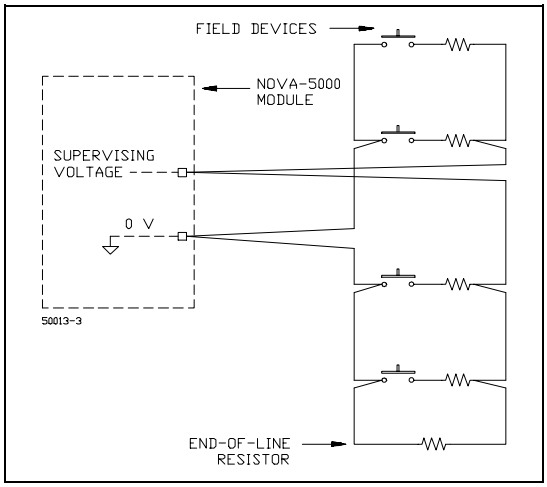

Figure 5010-4 **Incorrect** Wiring Method for Supervision

MODULE SETUP INSTRUCTIONS

All NOVA-5000 modules are completely tested and calibrated at the factory before shipment. The following adjustments may be necessary before installing the module to match the characteristics of the module to the system in which it is to be used.

Use with an Intrinsically Safe Zener Barrier

Each detection input on the module includes a current limiting resistor. If the Module is to be used with a zener safety barrier on either of its zones, this internal limiting resistor needs to be disabled. This is carried out by adjusting jumper plugs J1 (for channel 1) or J2 (for channel 2). The jumpers need to be on the two pins further from the edge connector if a barrier is used, nearer the edge connector if not. As shipped, the module is set up for use with no zener barrier.

Ground Fault Detection

The Module is shipped with integrated circuits installed in sockets U12 (channel 1) and U16 (channel 2). These IC's are the sensing for the ground fault detection circuits for the two channels. For any channel where the circuit must be intentionally grounded, the ground fault detection must be disabled. To do this unplug and discard the IC's U12 and/or U16.

! The Model 5010 Modules, as shipped from the factory, are calibrated for use on a non-grounded circuit. After the grounded circuits are installed, you must *recalibrate the supervisory circuits*, using the proceedure in the next section.

Calibration

When the 3.3 Kohm end-of-line resistors are correctly installed and the Model 5010 is running, the voltage measured between TP1 and TP3 (channel 1) or TP2 and TP3 (channel 2) should be between 0.50 and 0.60 volts DC. To check these voltages, you will need to use a Module Calibration and Test Extender Card available from Safety Systems Technology. If the measured voltages are out of range, unplug the module and use an ohmmeter to measure the resistance across the detection input terminals on the back of the rack. You should measure the 3.3 Kohm end-of-line resistor. If this is correct, adjust the test point voltage to +0.55 volts DC, using multiturn pot RV1 for channel 1 or RV2 for channel 2. When making this measurement, be sure that you adjust for **plus 0.55 volts** on TP1 or TP2, not minus 0.55 volts. After adjusting, check the module performance. With the 3.3 Kohm end-of-line still connected, an additional 1.1 Kohm resistor across the detection input terminals should cause an alarm. A fault should be generated if the 3.3 Kohm resistor is shorted out and when the resistor is disconnected. If ground fault detection is activated, shorting either side of the detection input to ground should initiate a fault.

Module keying

Before installing each Model 5010 Module into the wired slot in the mounting rack, be sure that the snap in covers have been installed at keying locations 1 and 10 of the rack keying strip. See "Module Keying Instructions" in the mounting rack section of this manual for complete details.

! Installation of the keying system is very important. A module can be permanently damaged if it is plugged into a slot which is wired for a different type of module.

Modules may be inserted into or unplugged from the rack at any time, even with the power on. This will not damage the modules nor generate any false alarms, but will of course generate a fault alarm.

OPERATING INSTRUCTIONS

General

Each Model 5010 Smoke/Fire Module includes two independent channels, each offering similar facilities. The module supplies the operating voltage to a zone of fire detectors, and monitors the detectors for an alarm and the wiring to the detectors for a fault condition.

Alarms and faults are indicated as follows:

- When an alarm or fault indication is first detected, the relevant indicator lamp flashes. Most systems are wired so that an audible alarm also sounds at the same time. If the Alarm Acknowledge button is depressed, any flashing indication becomes steady, and this action will silence the audible alarm on most systems.

When the cause of an alarm or fault is removed, the indication generally operates as follows:

- If the indication is flashing, it remains flashing until it is acknowledged or the zone is reset, when it will extinguish.
- If the indication is steady, it will extinguish immediately.

Some faults and alarms are latched so that they can only be cleared by resetting the channel.

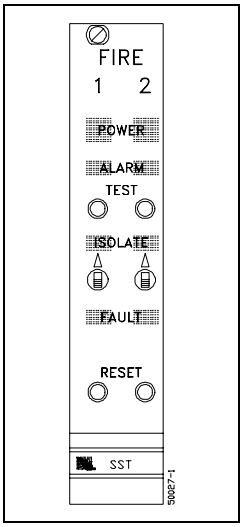

Figure 5010-5 Front Panel

Power lamps (green and yellow)

The two lamps at the top of the panel indicate the status of the power supply to the module. A green lamp indicates that both of the dual 24V power feeds are within specification. If the yellow lamp is on or flashing, an out-of-tolerance power condition or power failure is indicated. If the indication is on one zone only, it is probable that a fuse is blown. The power systems of each zone are independent, and failure of one will not affect the other zone. When a power fault is detected, the main channel fault lamp on the module will also be illuminated.

Alarm lamp (red)

This lamp will normally be off. When a fire alarm is detected, this lamp will flash, and the appropriate system outputs will be activated if the zone is not in the Isolate state. This alarm will latch in the module until the reset pushbutton on the module, or the main system reset pushbutton is depressed.

Alarm Test Pushbutton

This pushbutton will simulate an alarm for testing purposes. This switch will not operate unless the associated Isolate switch has been operated.

Isolate Lamp (yellow)

This lamp indicates that the Isolate switch is in the Isolate (up) position.

Isolate Slide Switch

This switch is recessed behind the panel and requires a small screwdriver to operate it. The switch is used in conjunction with the Alarm Test pushbutton for routine testing of the Module. When it is switched to its active (upper) position the following actions occur:

- the normal system outputs from the zone are inhibited, preventing inadvertent operation of extinguisher and alarm systems
- The yellow Isolate lamp is illuminated
- A pulse is transmitted on the Isolate Pulse bus and the Isolate Loop is open-circuited
- the existing alarm status (off, flashing or steady) is memorized, and will be restored when the isolate switch is returned to normal
- the yellow Isolate lamp starts to flash
- the alarm test button is enabled. When depressed, it will actuate the alarm pulse and alarm lamp module outputs, and the alarm L:ED on the module. It will <u>not</u> activate the alarm relay output. An alarm condition from the field wiring will do the same thing (alarm pulse, lamp, LED, but no relay).

When the isolate switch is returned to its normal (lower) position, an internal channel reset is generated so that any test alarm condition within the zone is cleared, thus preventing unwanted alarm outputs. The following actions also occur:

- the Isolate lamp will extinguish if it was steady
- the test alarm condition is cleared
- the alarm status prior to the Isolate switch being operated is restored
- the Test button is inhibited.

Fault Lamp (yellow)

Below the Isolate switch is the yellow Fault lamp. This will flash if any of the following occurs:

- the field wiring is measured as open or short circuit
- there is ground fault leakage from either side of the field wiring (if the ground fault detection option is installed).

The Fault state is always latched, and will require a reset, either from the system reset pushbutton or from the front panel pushbutton to restore normal operation.

Reset Pushbutton

At the bottom of the panel is the Reset pushbutton. When operated this will perform the following actions:

- alarms and faults are cleared
- a lamp test is carried out: all lamps on the channel should illuminate
- The detection line power is interrupted to reset any field detectors that have latching alarms

The same action (except for lamp test) occurs whenever the main system reset pushbutton is depressed.